Kortvågsantenner
Dipol

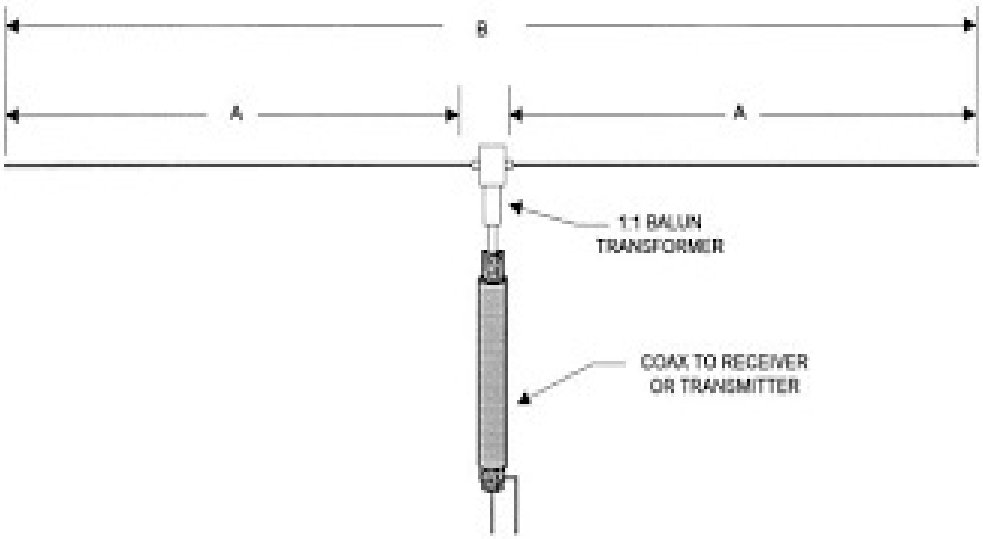

Kortvågsantenner
Dipol

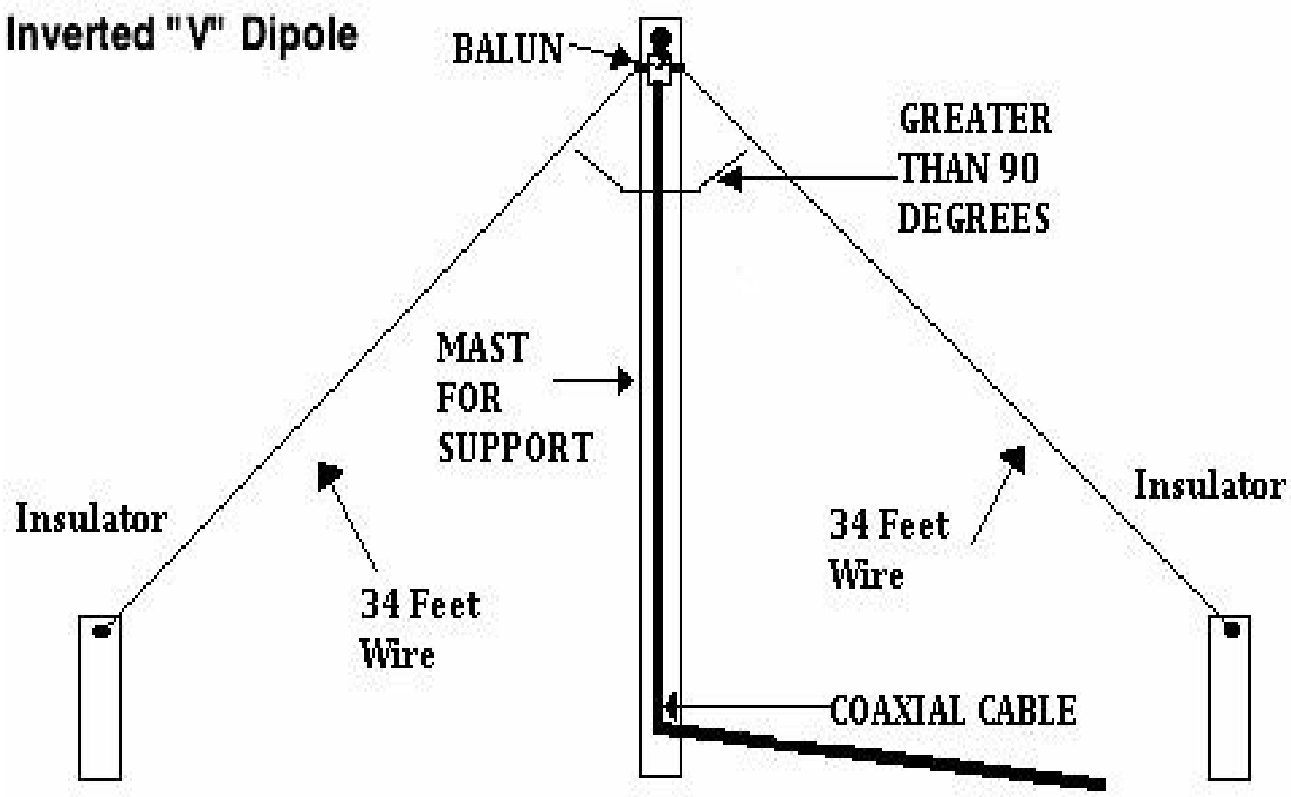

Kortvågsantenner
Dipol - Sloper

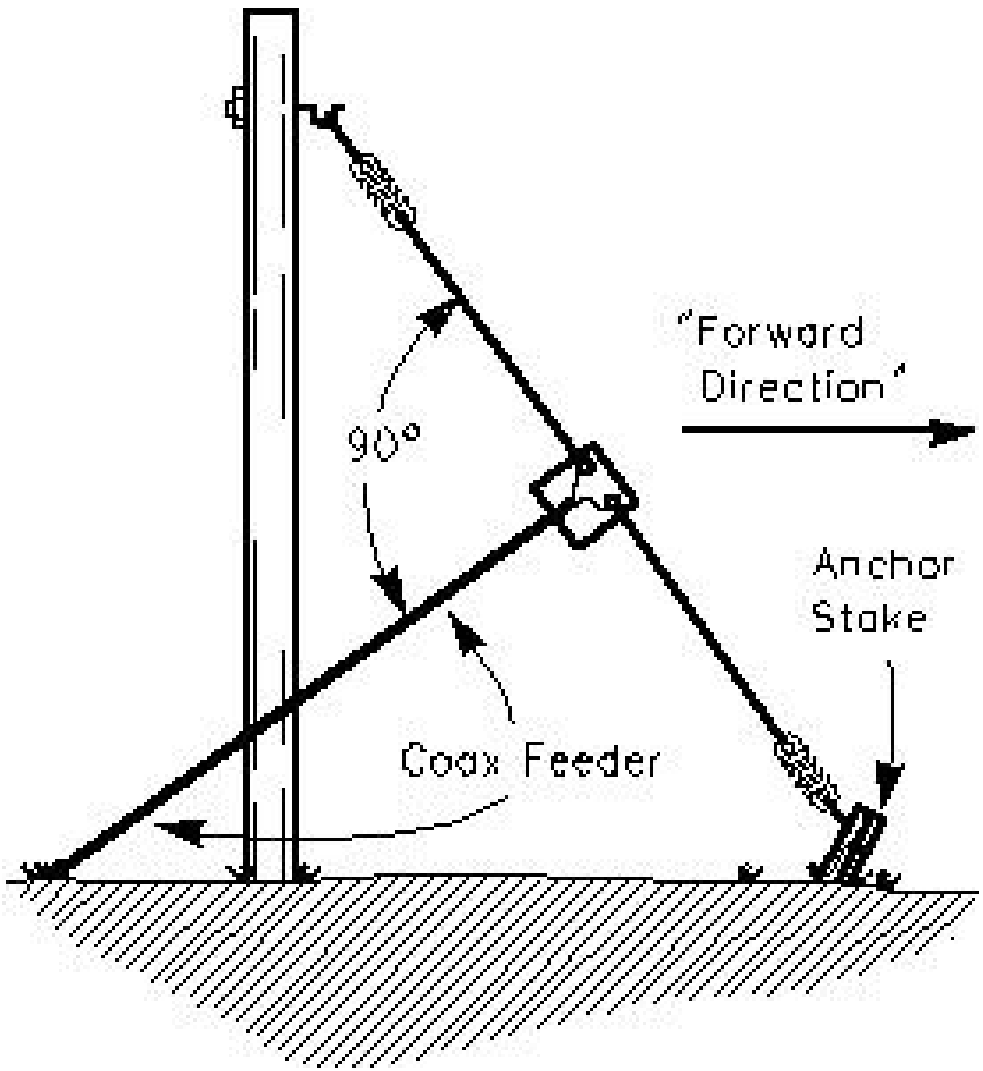

Kortvågsantenner
Multibands-dipoler

W3DZZ

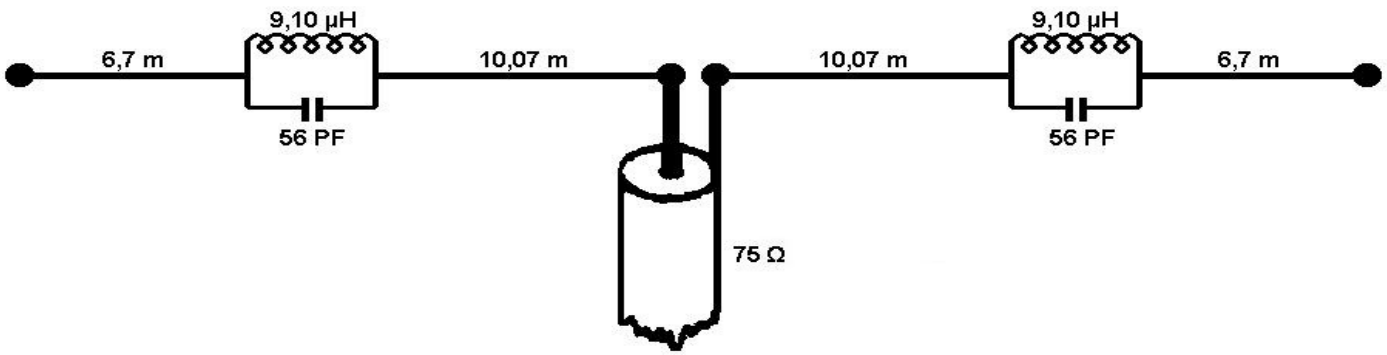

G5RV

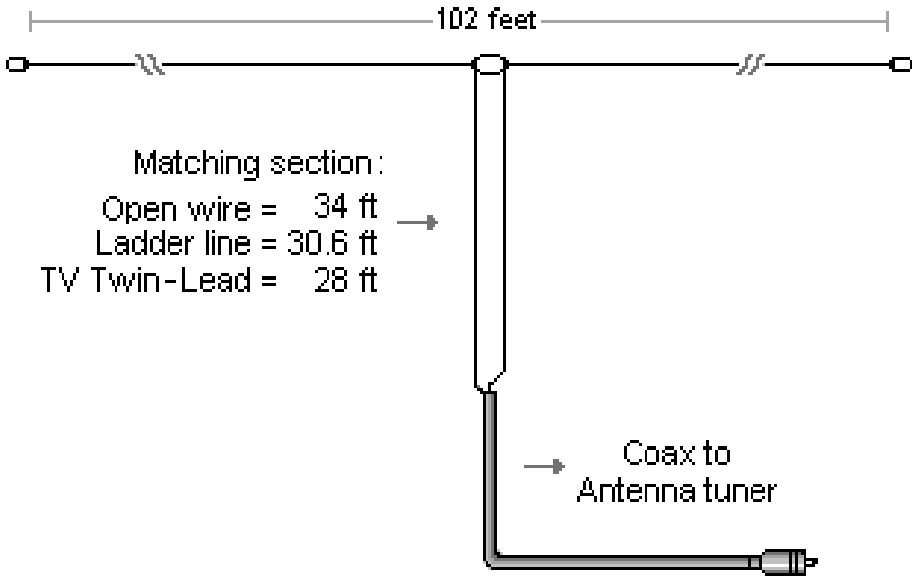

DJ2XH (FD-4) WINDOM

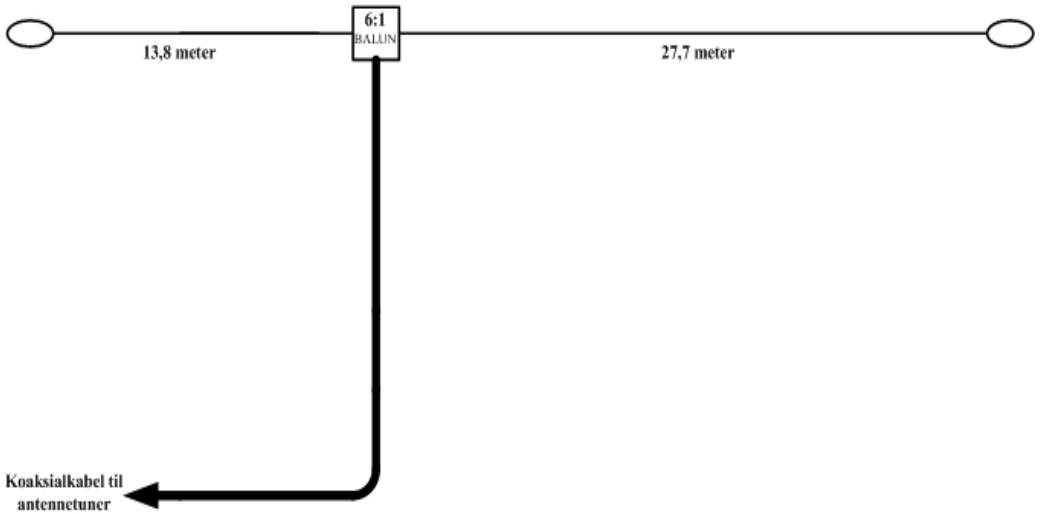

Kortvågsantenner
Dubbel - FD4

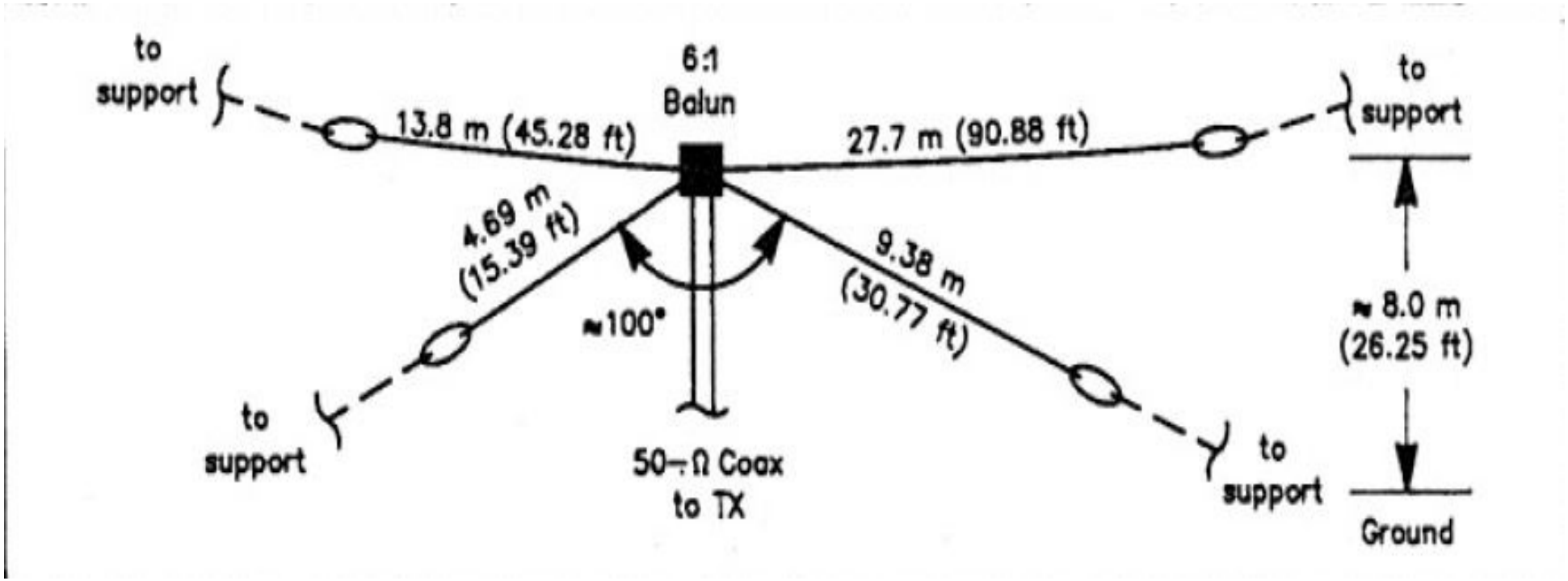

Kortvågsantenner
Dubbel FD4

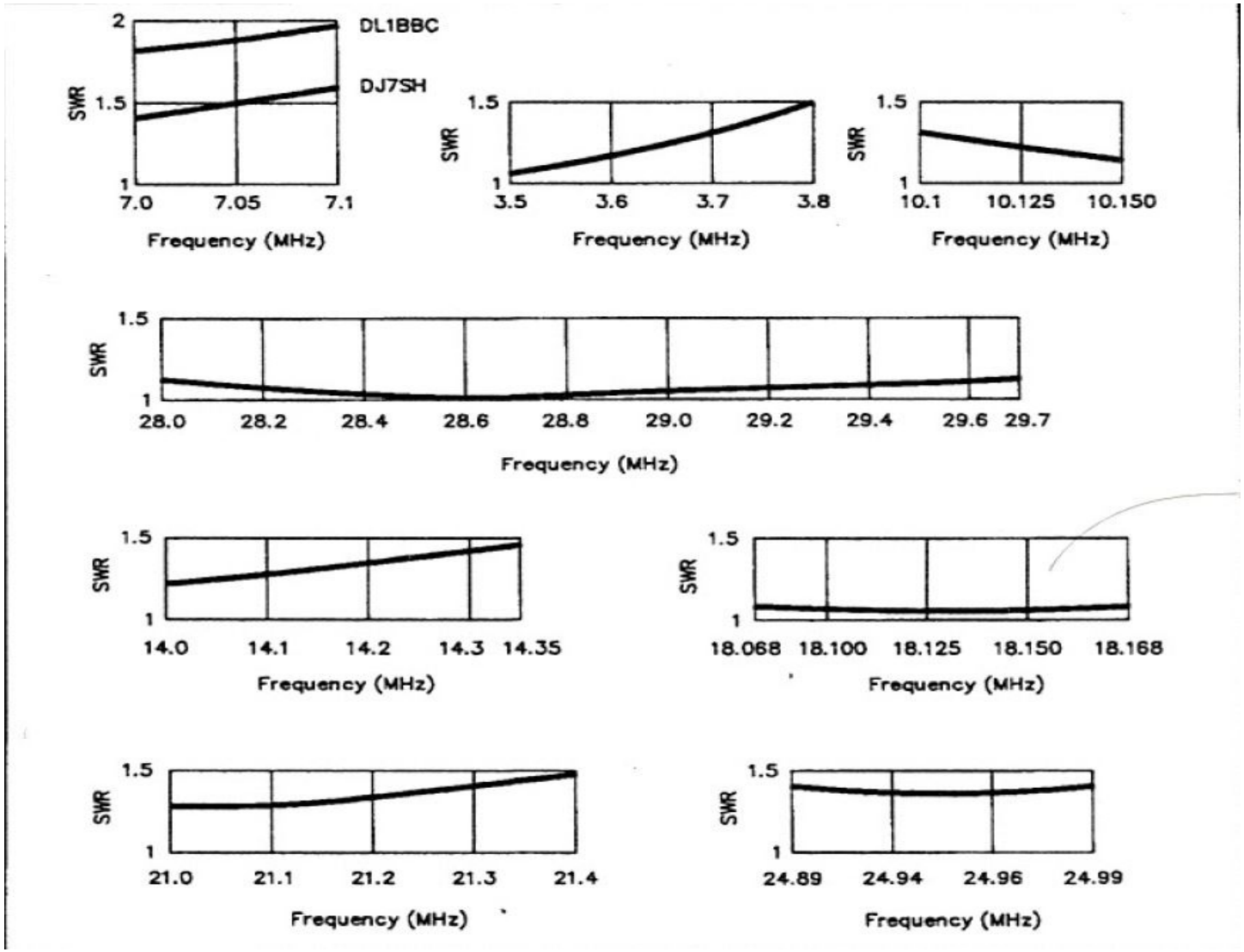

Kortvågsantenner
Dubbel FD4 - SM3ESX

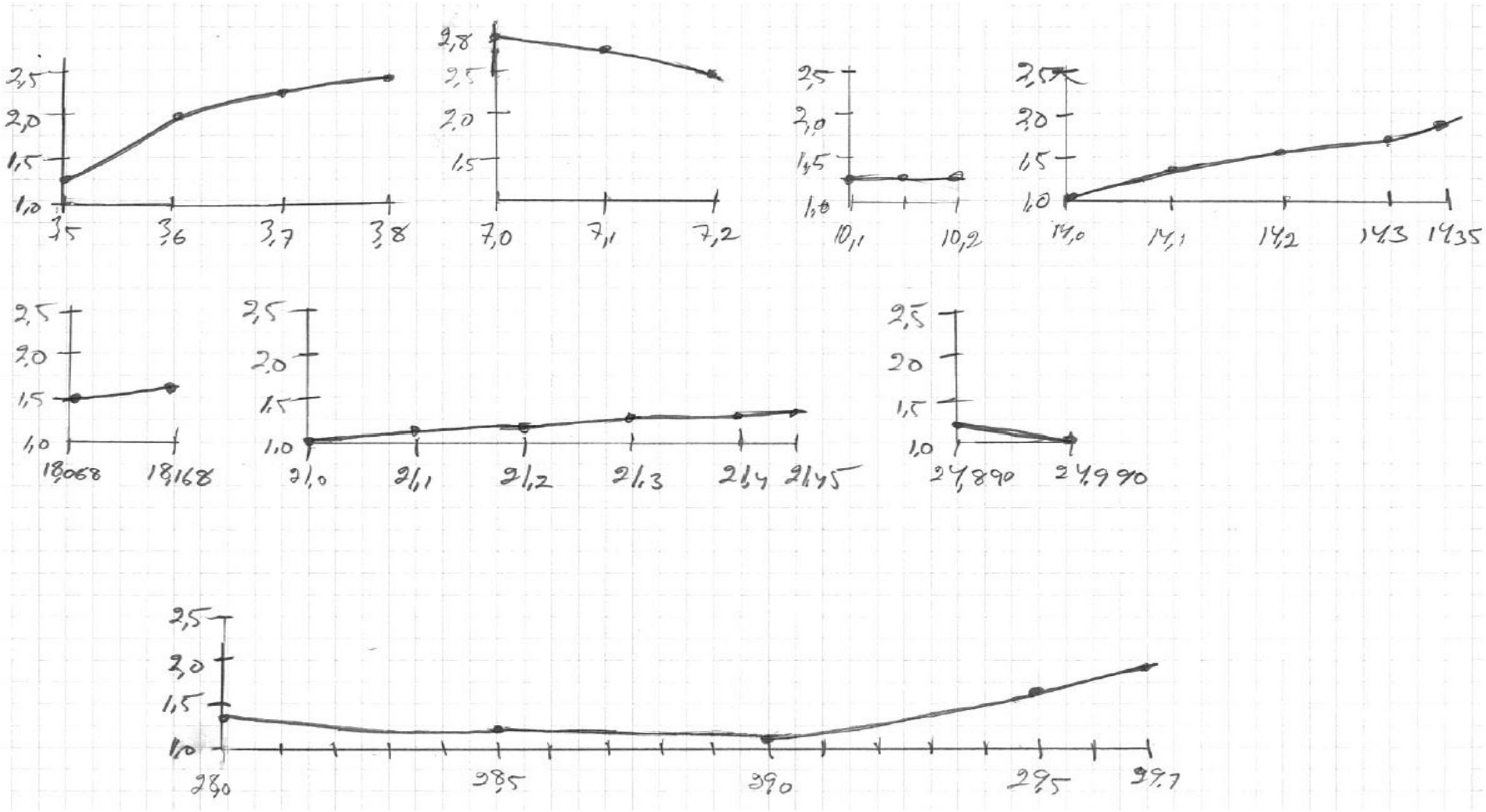

Kortvågsantenner
Ökad bandbredd för 80 mb dipol

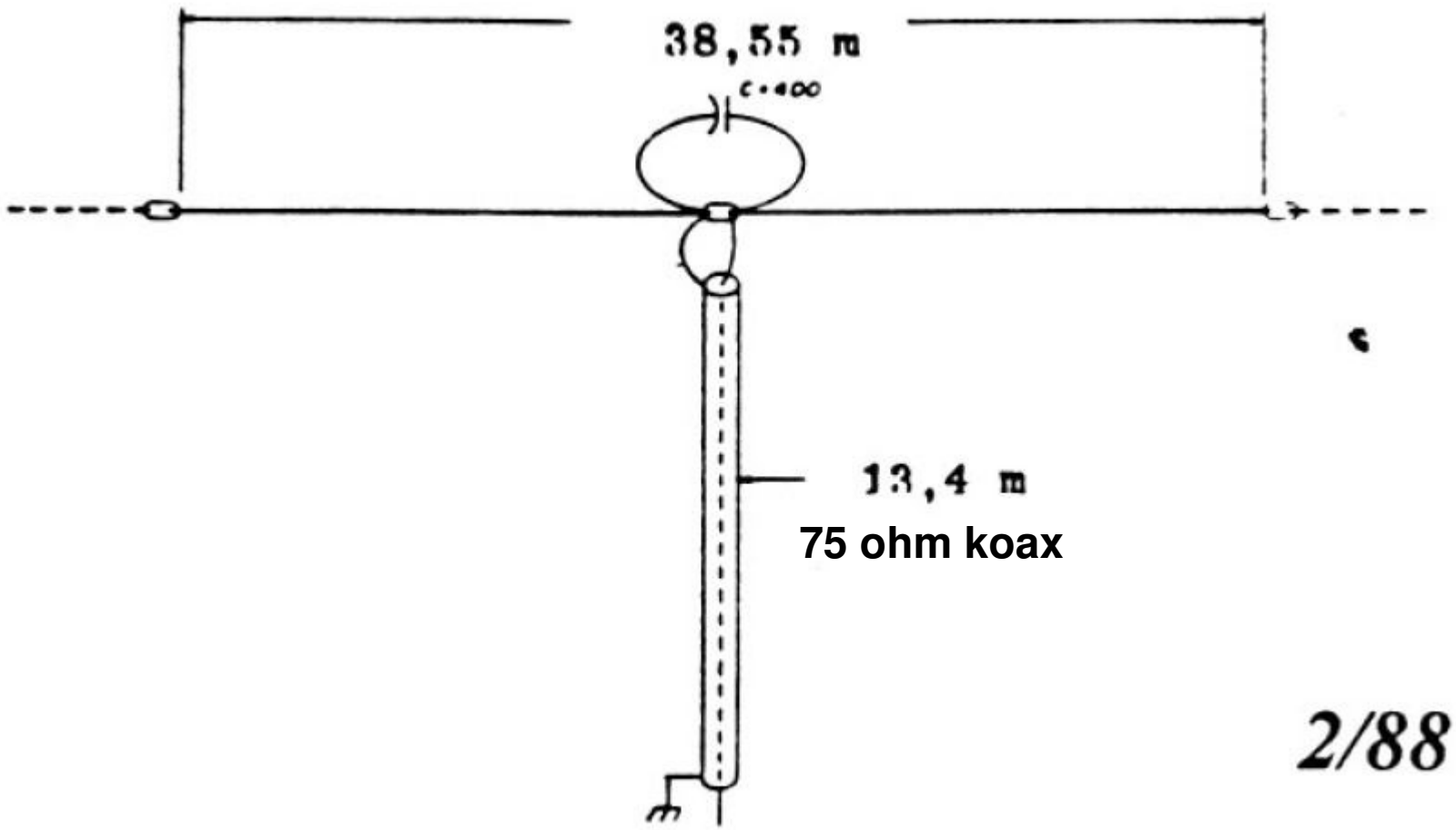

Kortvågsantenner
Ökad bandbredd för 80 mb dipol

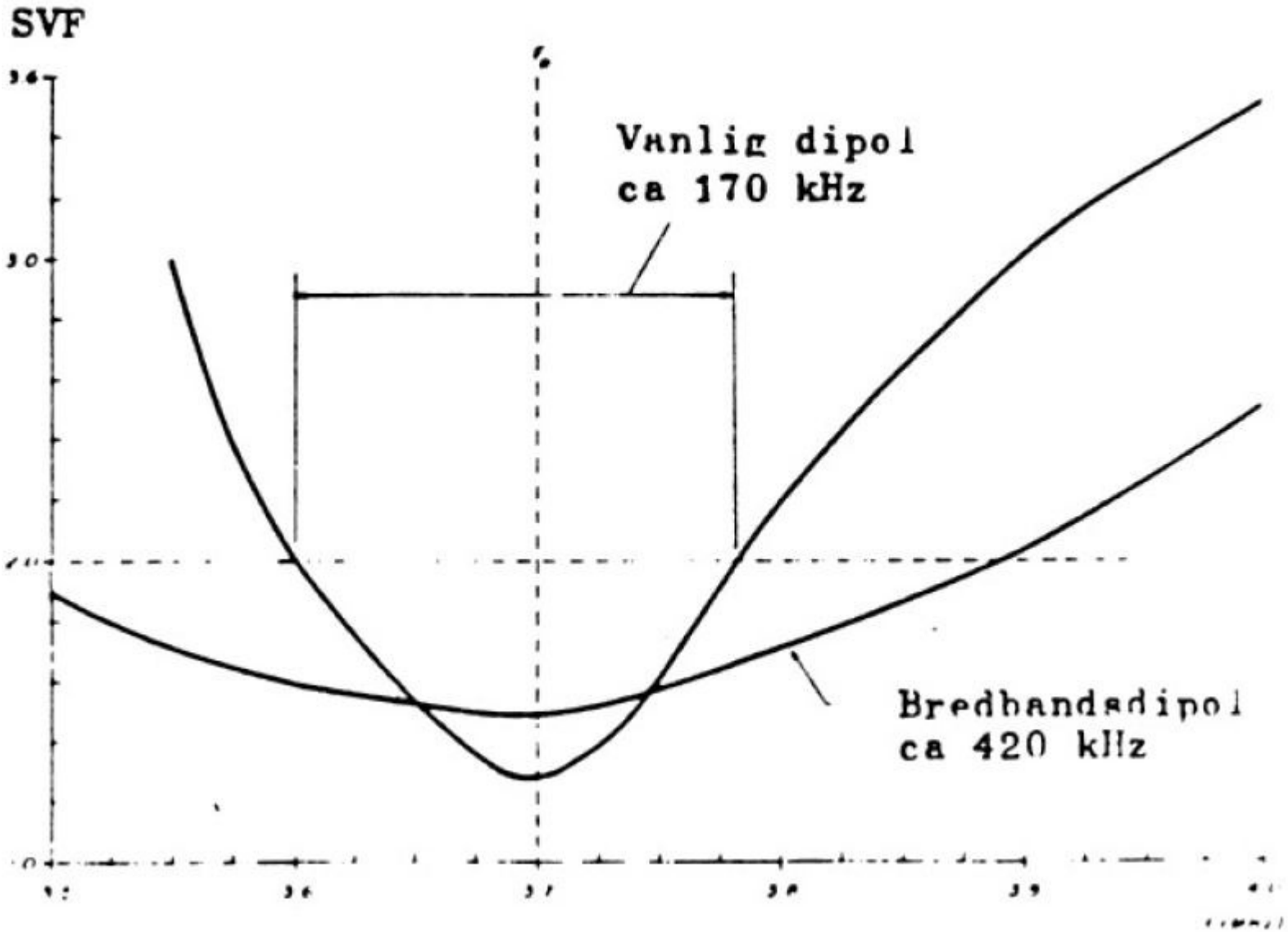

Kortvågsantenner
vikt dipol för för 80 mb

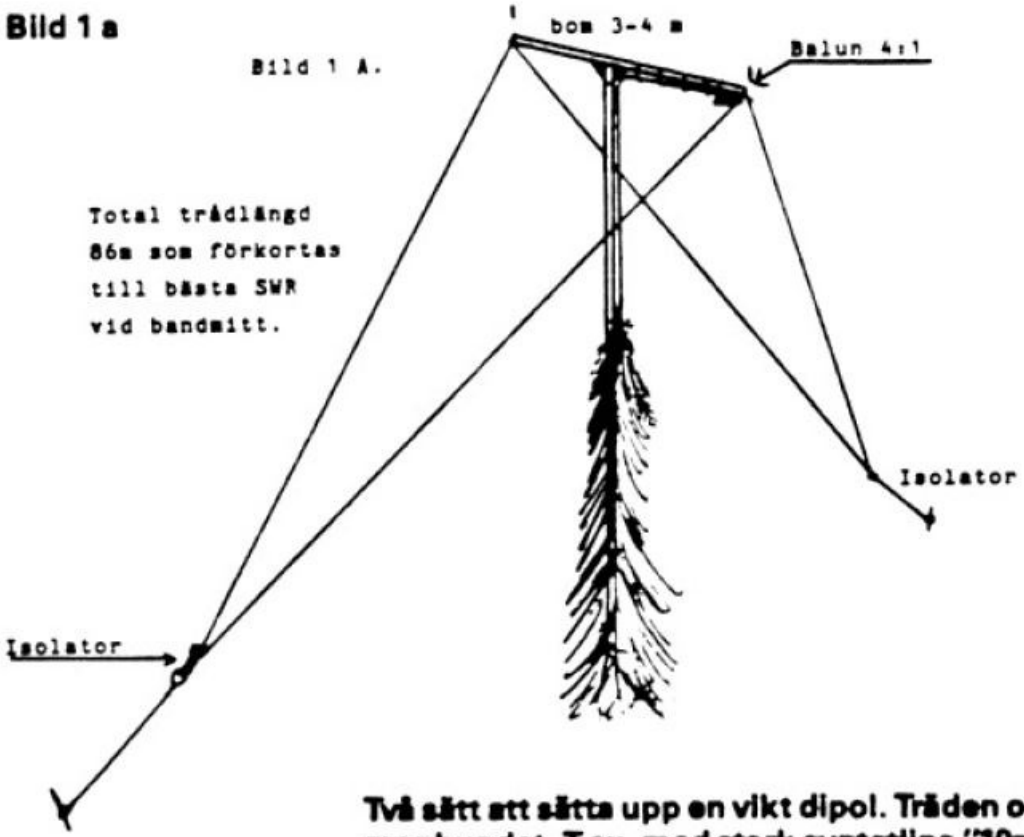

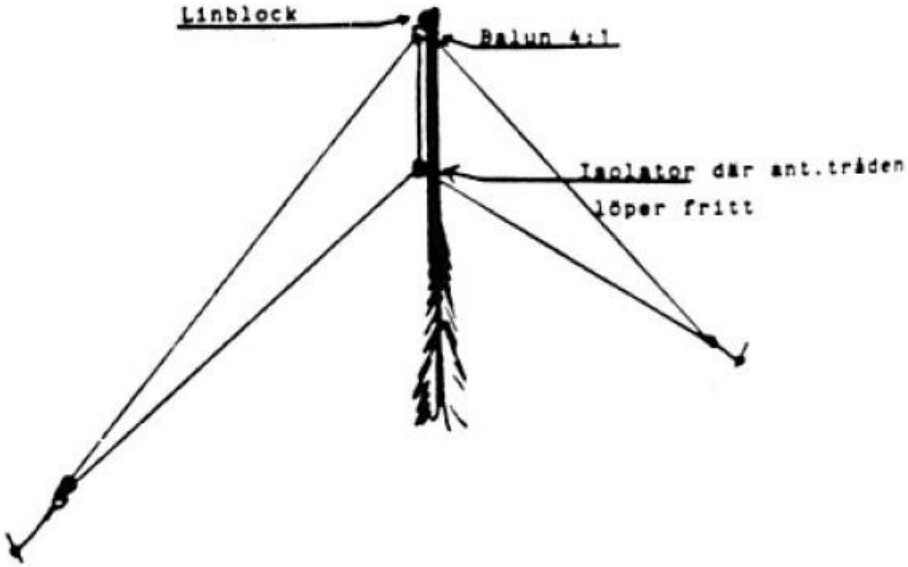

9/88

Två sätt att sätta upp en vikt dipol. Träden och masterna kan med fördel stagas där masten och trädet är sammanbundet. T.ex. med stark syntetlina "10mm skot-lina" som kan köpas i alla affärer som säljer båt-tillbehör.

Kortvågsantenner
Vertikal antenn - GP

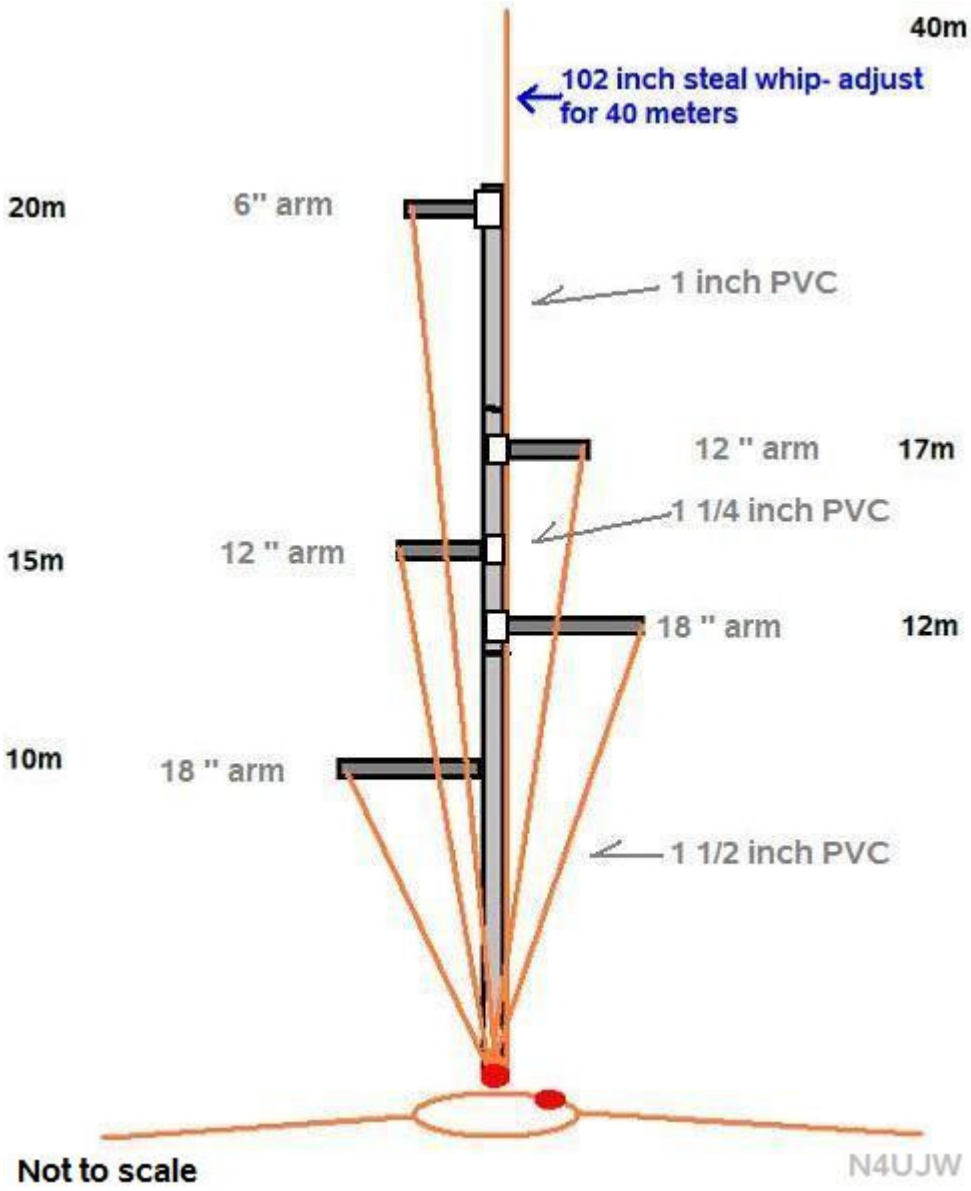

Kortvågsantenner
Horisontell loop

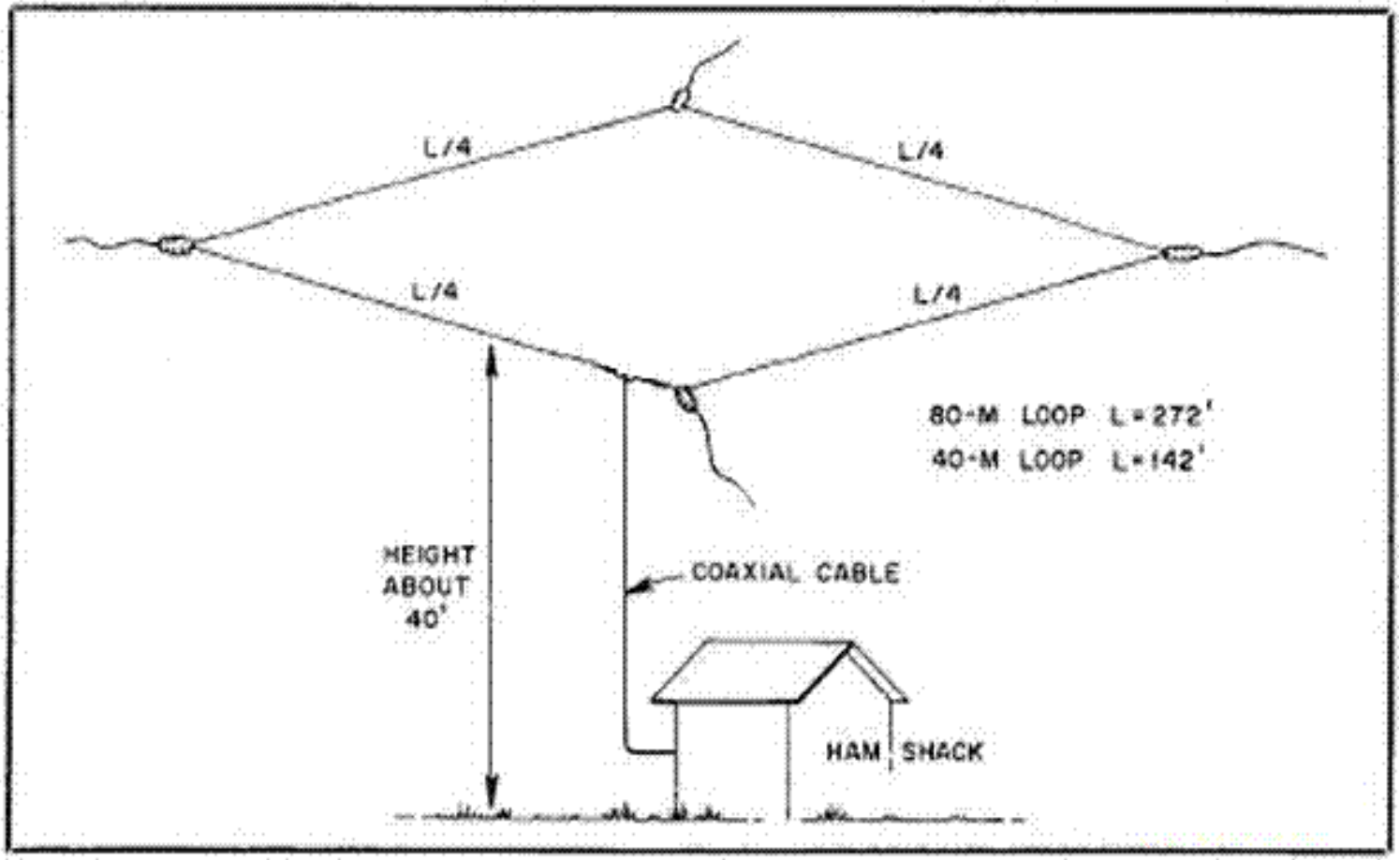

The Loop is erected horizontal to the earth.

Kortvågsantenner
Vertikal Delta loop

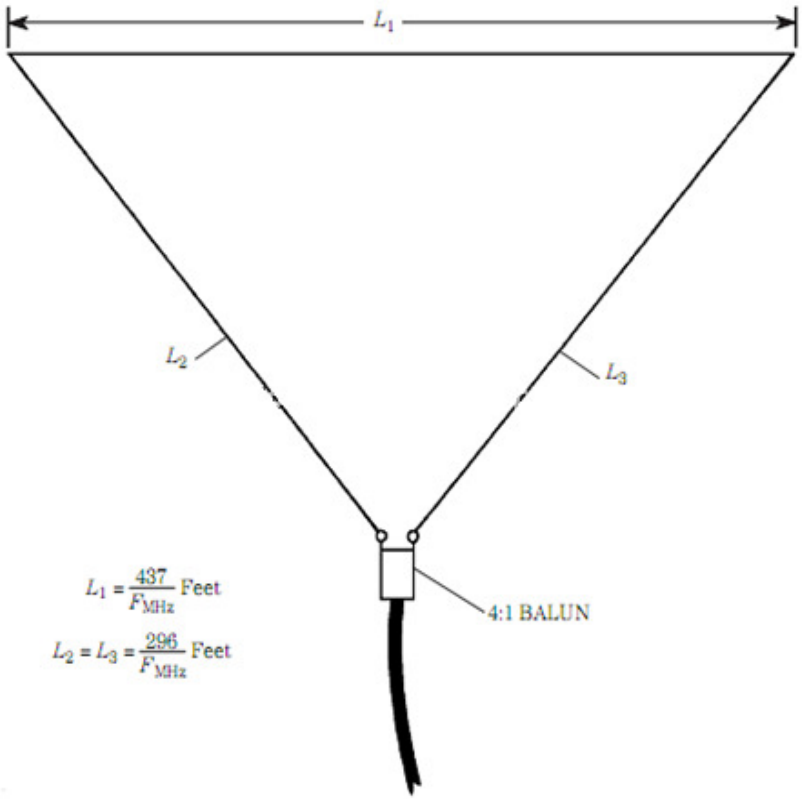

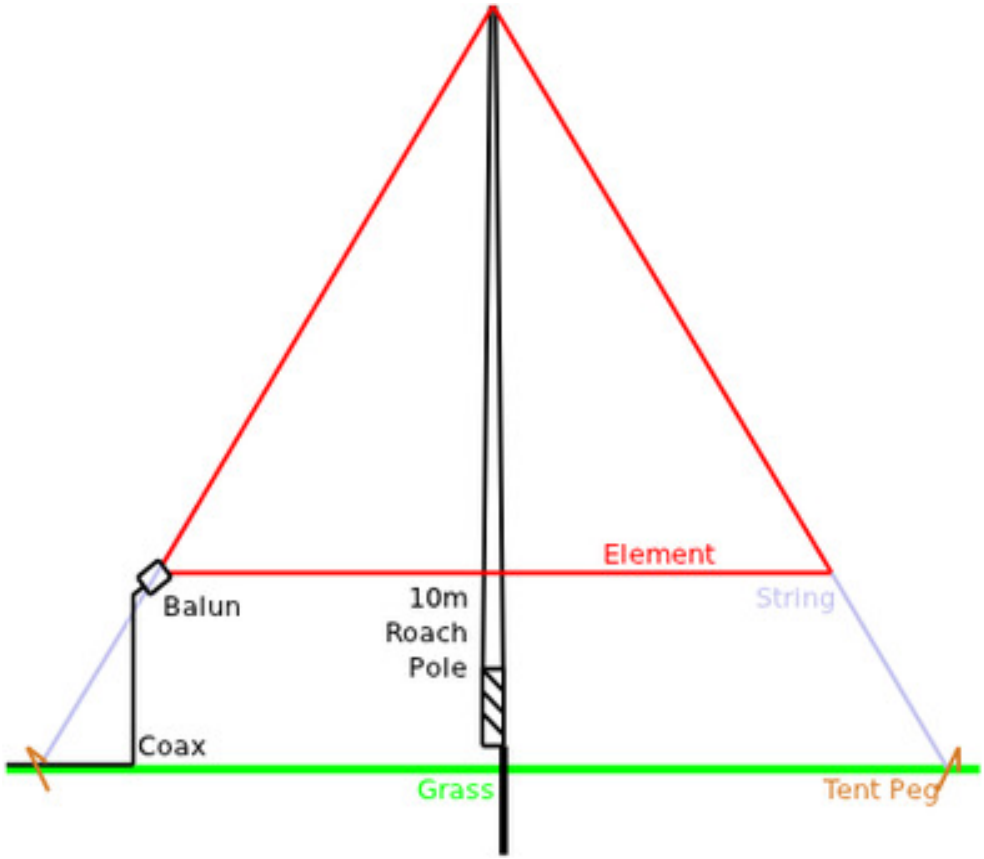

Antenn anpassning – N6BV
QST June 2015

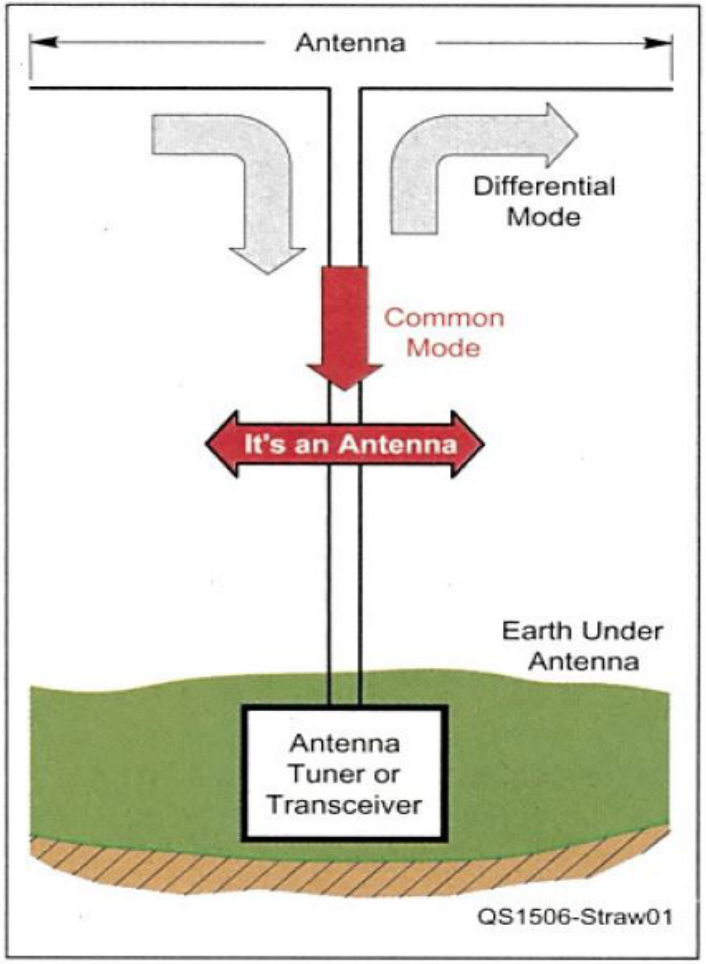

Table 1
Feed-point Impedances for a 66-foot-long, Center-fed Inverted V Dipole, Apex 50 Feet High Over Ground with Dielectric Constant of 13, Conductivity of 0.005 S/m

Frequency	Feed-Point Impedance
1.83 MHz	1.6 – *j* 2257 Ω
3.8 MHz	10.3 – *j* 879 Ω
7.1 MHz	64.8 – *j* 40.6 Ω
10.1 MHz	21.6 + *j* 648 Ω
14.1 MHz	5287 – *j* 1310 Ω
18.1 MHz	198 – *j* 820 Ω
21.1 MHz	103 – *j* 181 Ω
24.9 MHz	269 + *j* 570 Ω
28.4 MHz	3089 + *j* 774 Ω

Figure 2 — Some common-mode current chokes. [Jim Brown, K9YC, photos]

Antenn anpassning

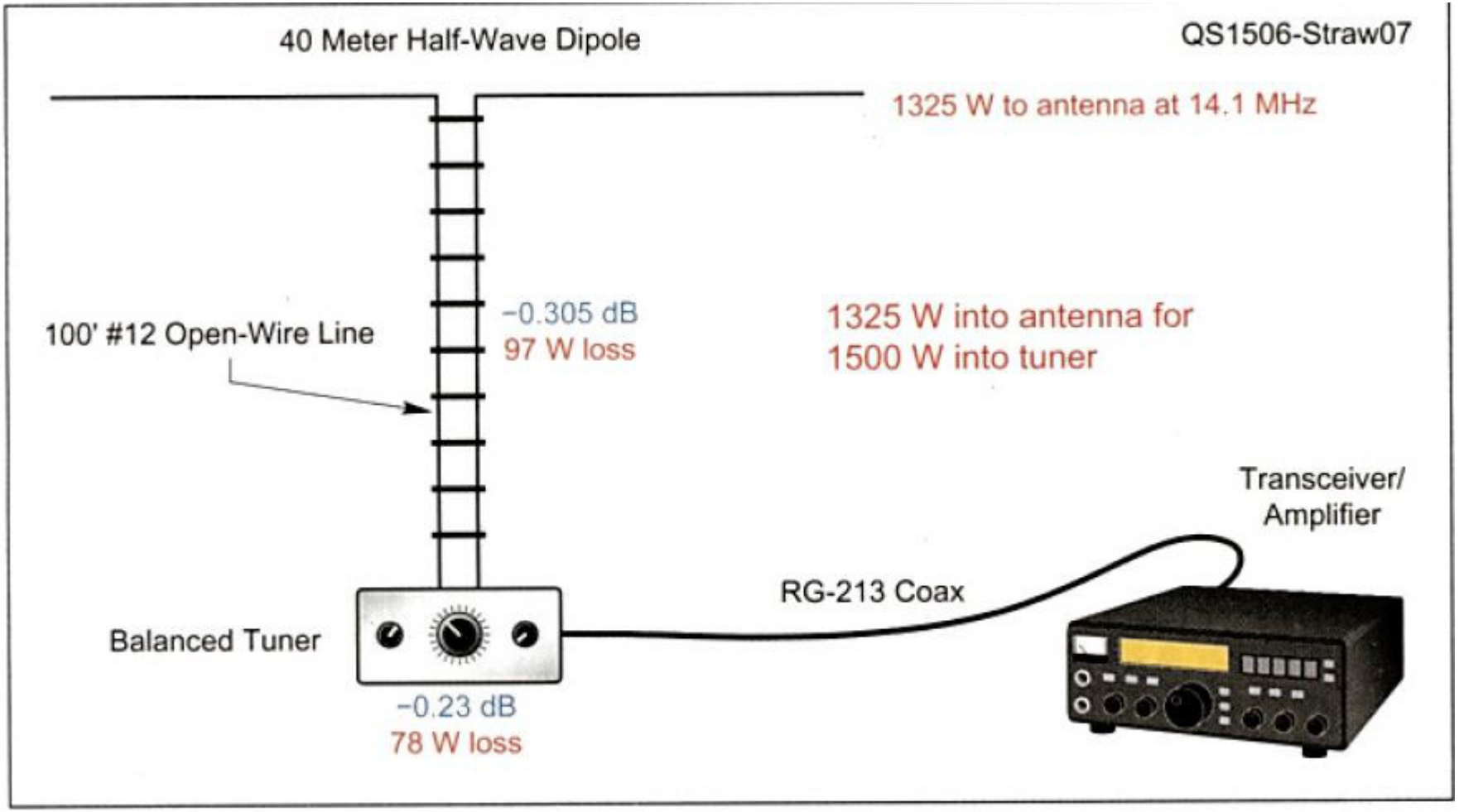

Figure 7 — Power losses in the antenna setup of Figure 5. The antenna receives 1325 W for 1500 W input to the balanced antenna tuner, such as a Johnson Matchbox.

Antenn anpassning

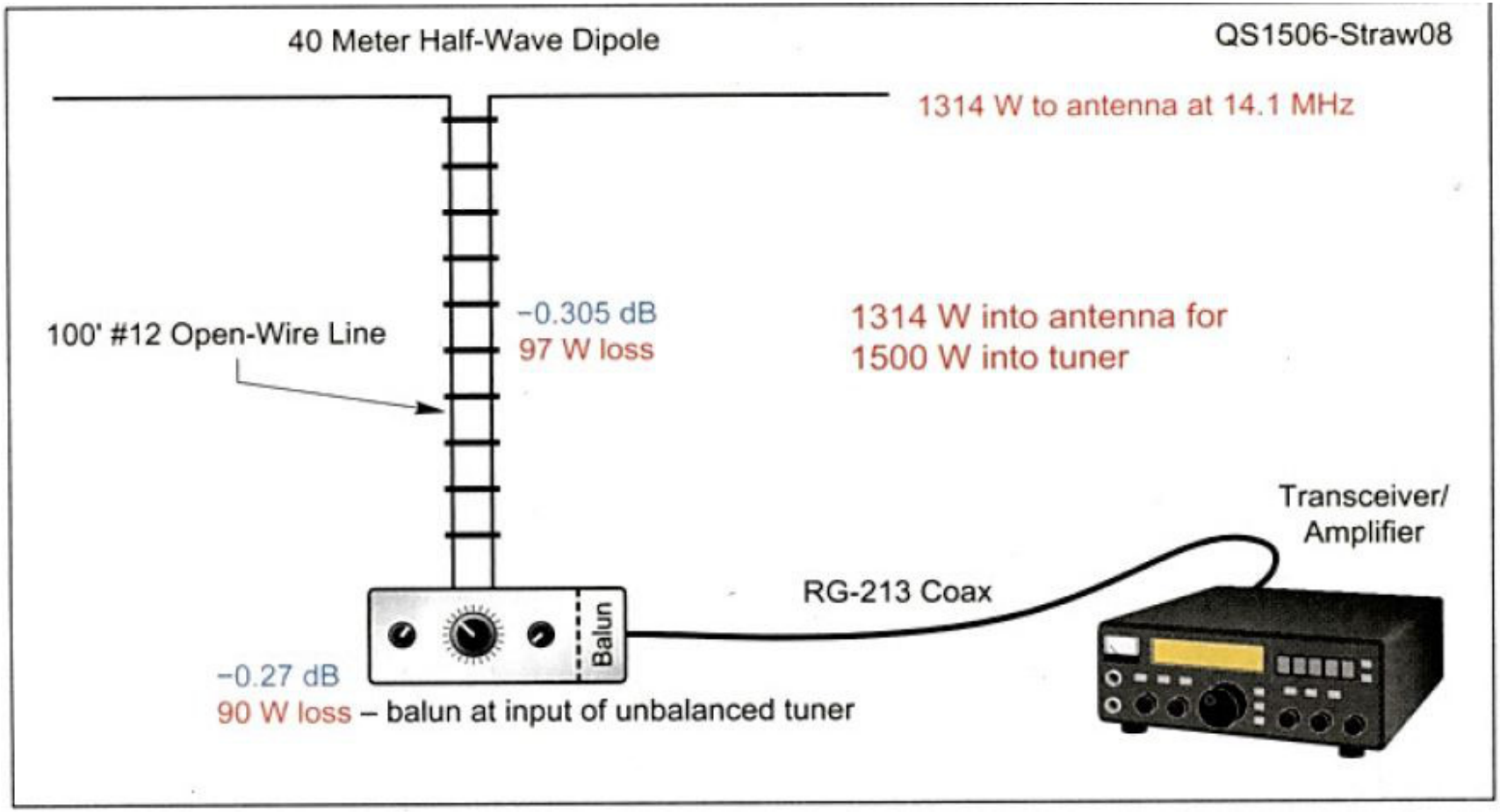

Figure 8 — Power losses when an unbalanced antenna tuner network is isolated from ground using a common-mode choke balun at its input. The efficiency of the input balun is high because it is being operated into the 50 Ω for which it is designed. The net power reaching the antenna is 1314 W, compared to the 1325 W for the Johnson Matchbox used in Figure 7.

Antenn anpassning

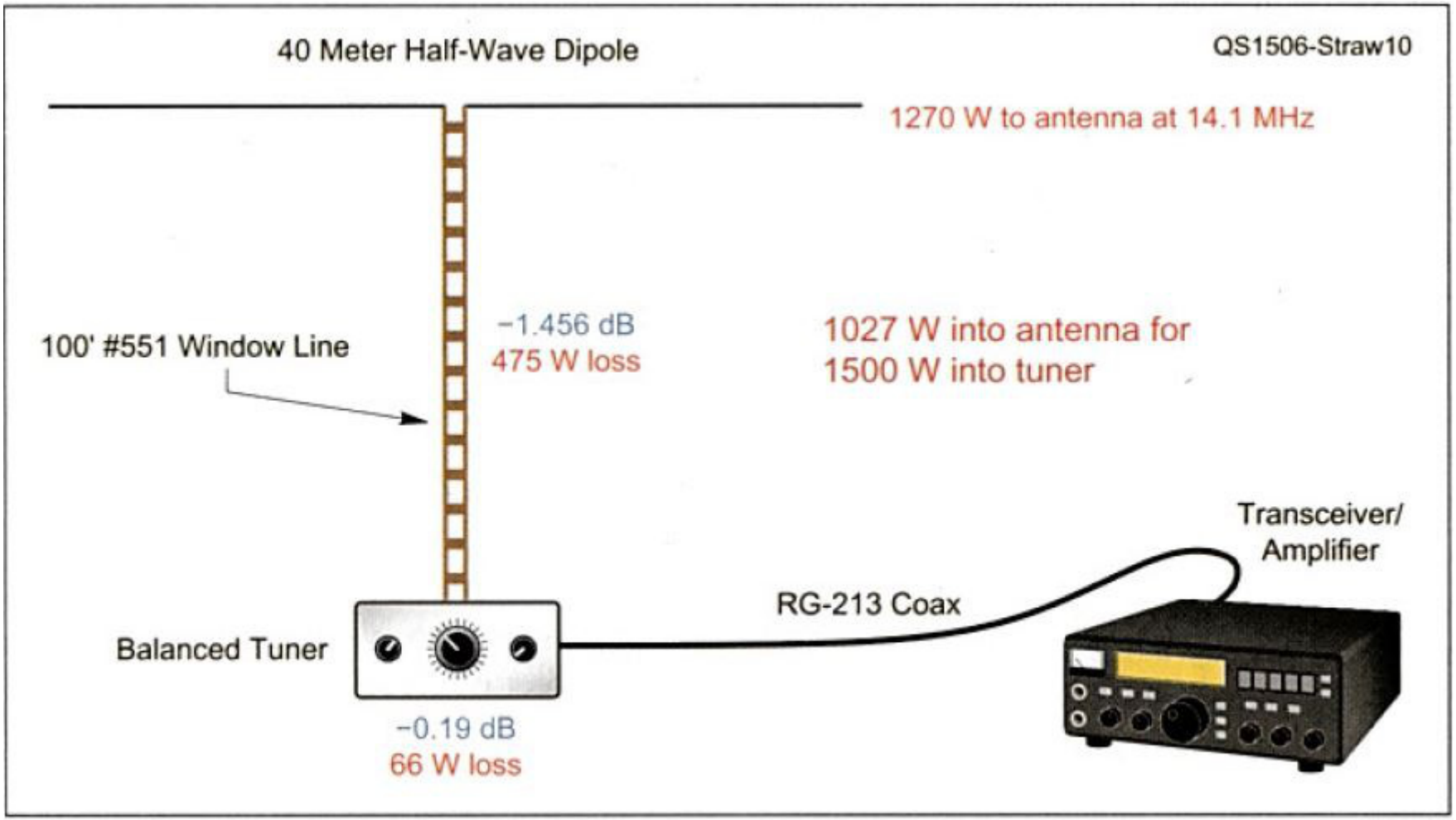

Figure 10 — Power losses for Johnson Matchbox feeding 100 feet of "window ladder line" instead of #12 AWG wire open-wire line. The net power reaching the antenna is 1027 W, with 475 W lost in the window ladder line, which uses #18 AWG copper-clad wire.

Antenn anpassning

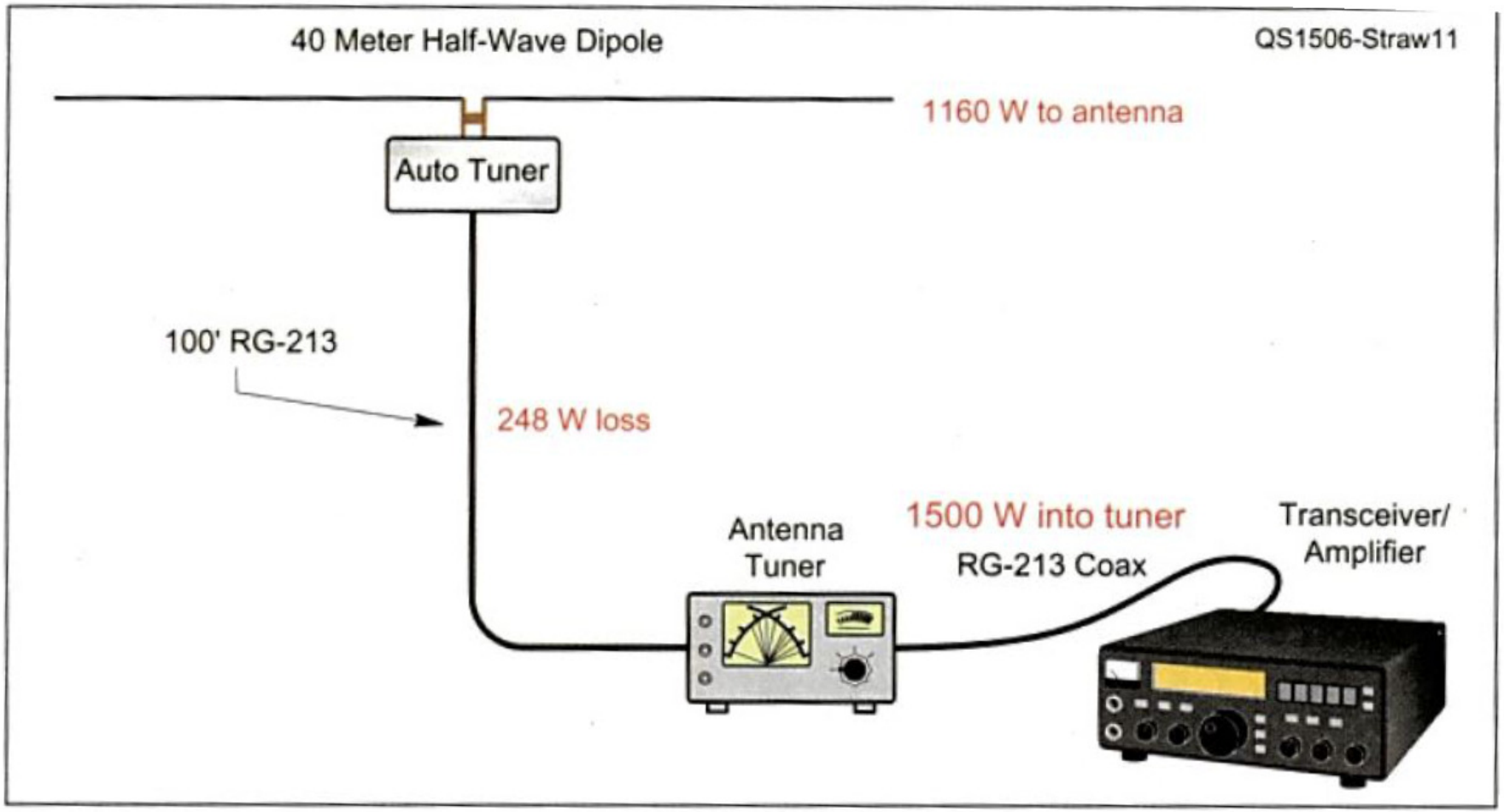

Figure 11 — Setup for feeding a 40 meter inverted V dipole at 14.1 MHz, with an automatically tuned antenna tuner located up at the antenna feed point.

Antenn anpassning

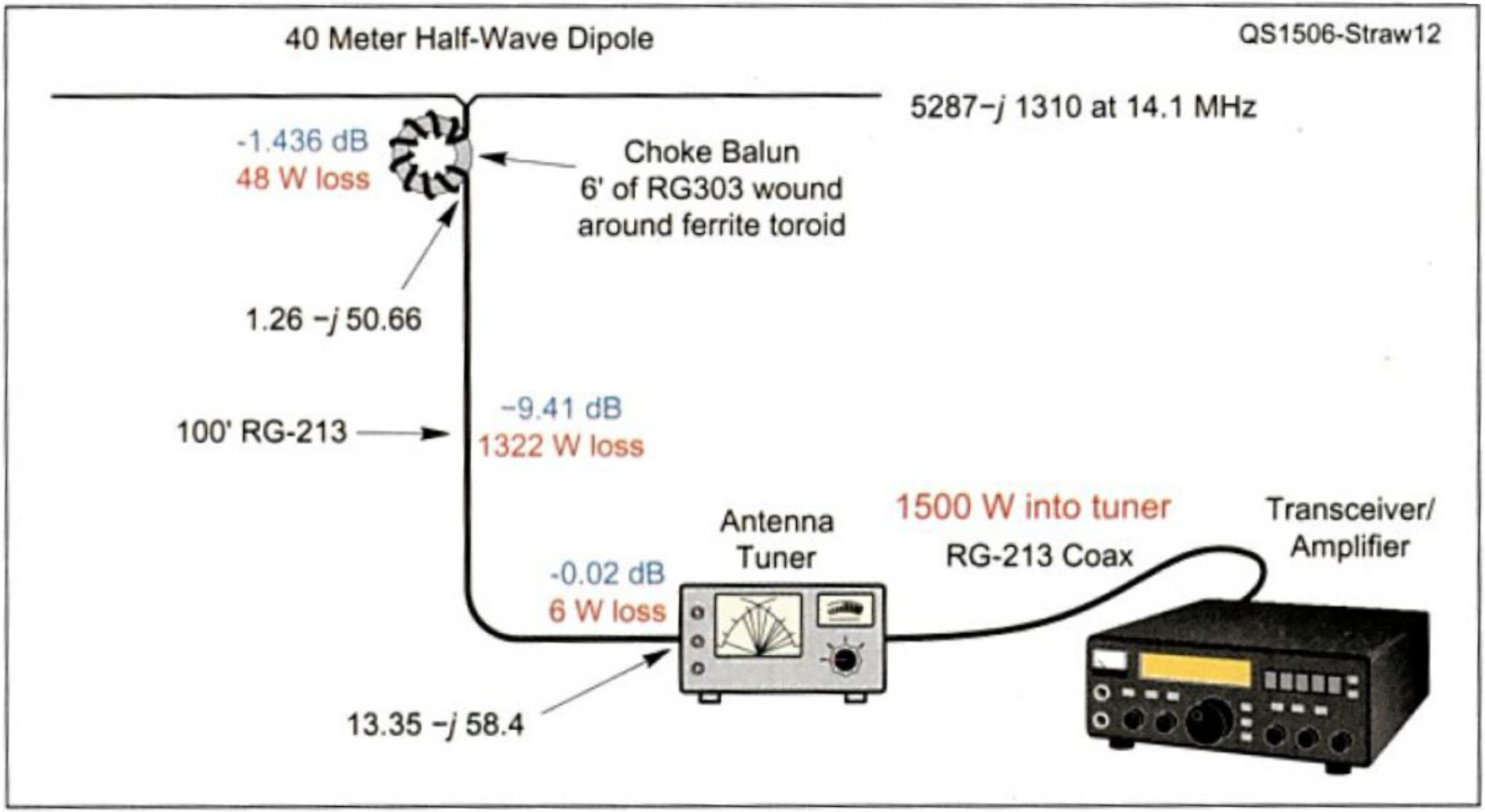

Figure 12 — Setup for "N6BV's Train Wreck," where common-mode current choke is placed at antenna feed point. The choke is made up of 6 feet of RG-303 Teflon-insulated coax threaded through ferrite toroids. The loss in the 100 feet of RG-213 feed line is 9.41 dB, very high indeed.

Antenn anpassning

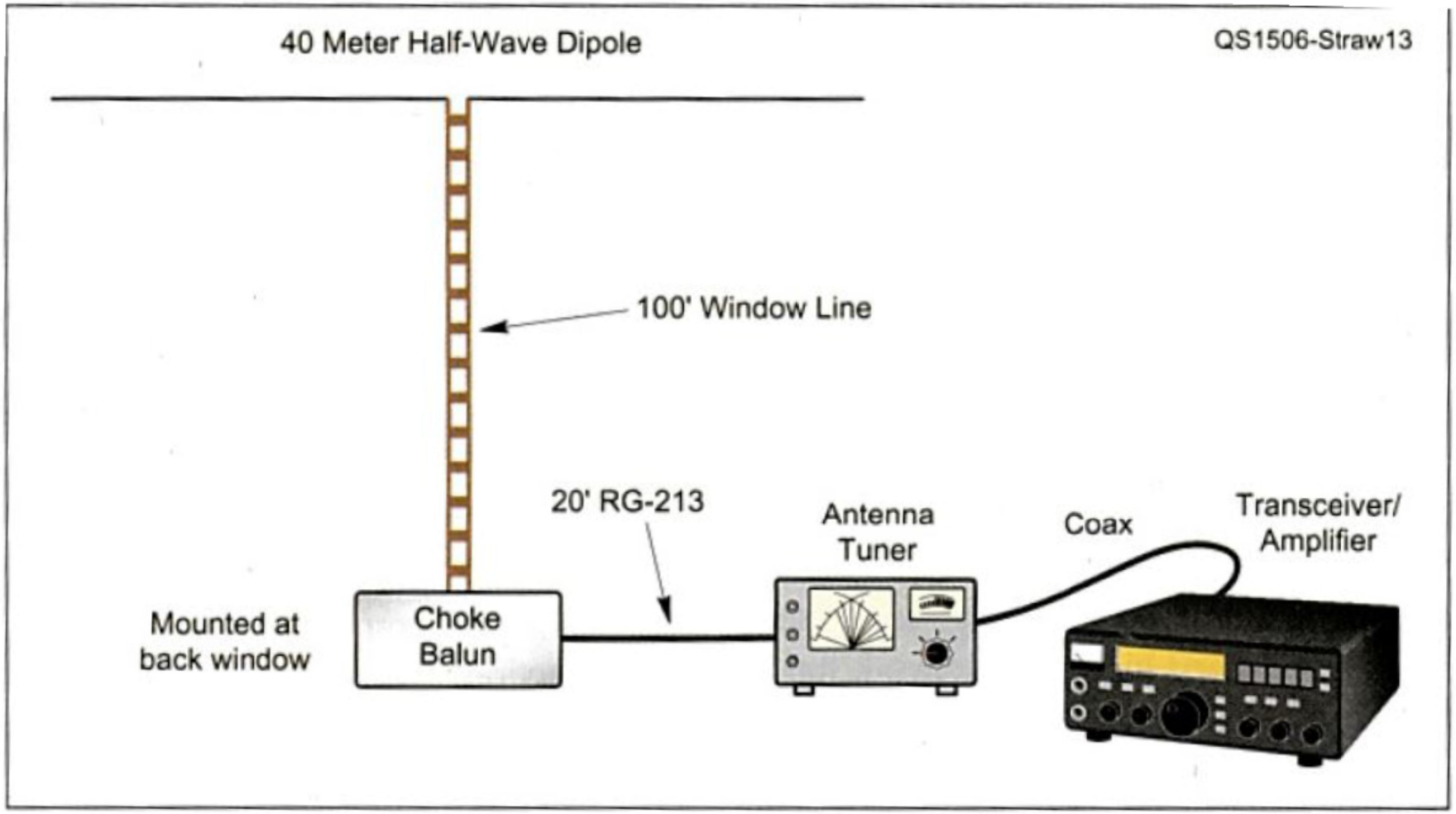

Figure 13 — A popular method for feeding a multiband dipole, where the common-mode choke balun is placed at a rear window in the shack and a jumper of RG-213 coax connects the choke to an antenna tuner located at the operating position. I assumed in this example that the jumper coax is 20 feet long.

Antenn anpassning

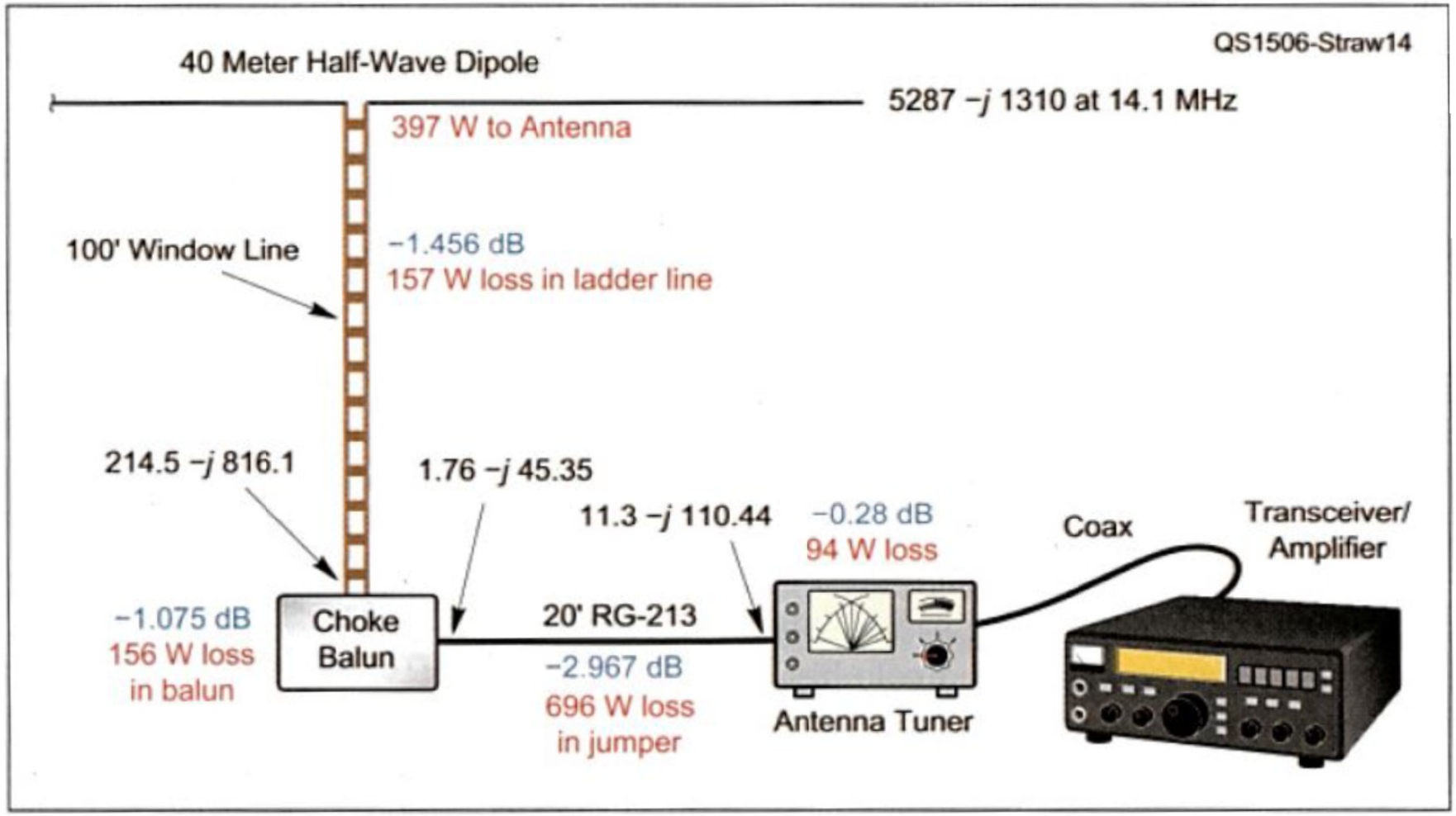

Figure 14 — Power loss in watts for system with choke balun placed at a rear window in the shack. A staggering 696 W is lost in the 20-foot-long jumper between the antenna tuner and the choke! The choke balun dissipates 156 W and it will probably become a "crispy critter" if the key is held down for long.

Antenn anpassning

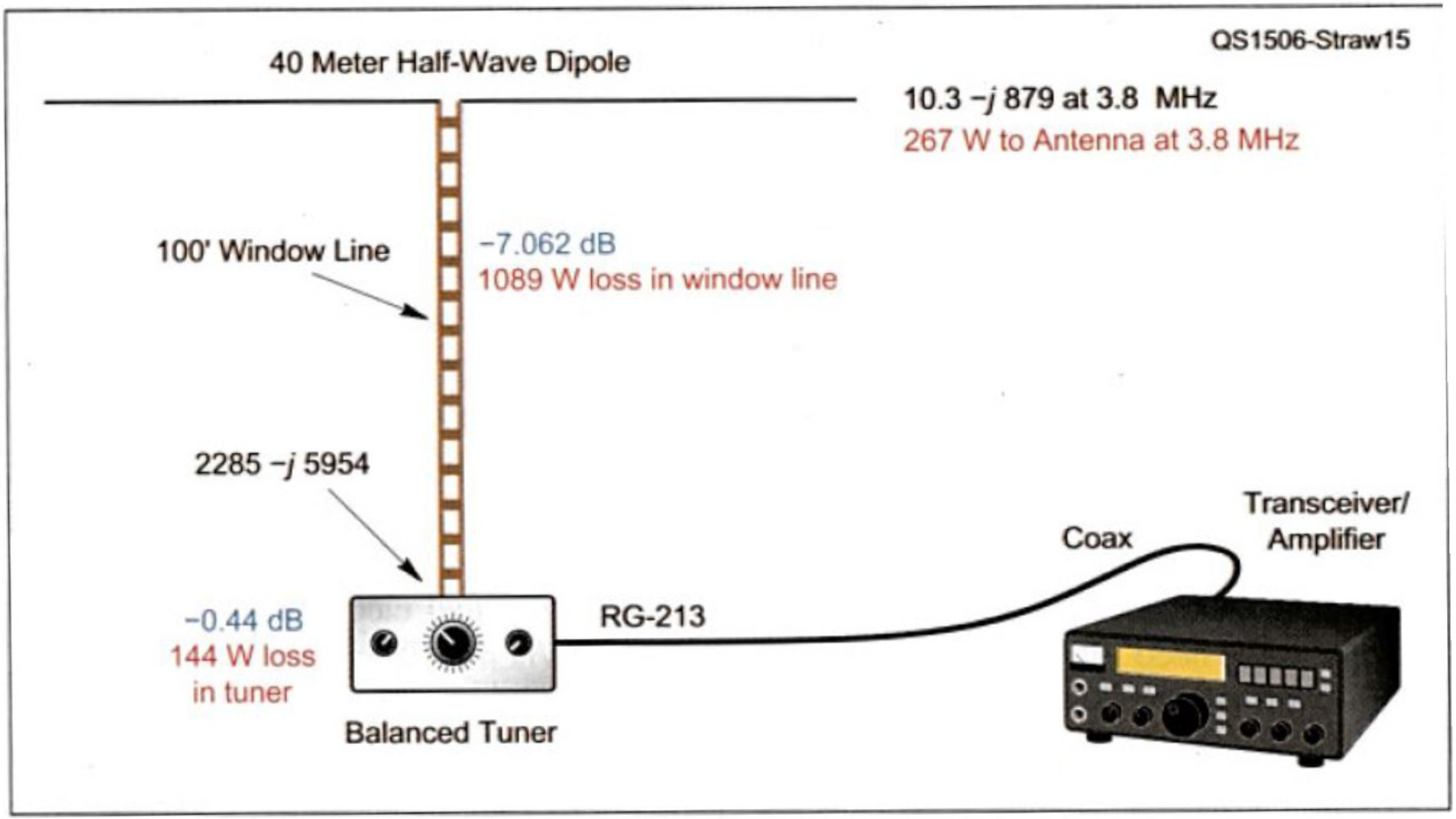

Figure 15 — Setup for a 40 meter inverted V dipole fed on 80 meters, showing impedances and losses at each juncture. The antenna tuner is high efficiency, like a Johnson Matchbox. The window ladder line has a loss of 7.062 dB in this stressful condition.